Sensors for Sanitary Applications

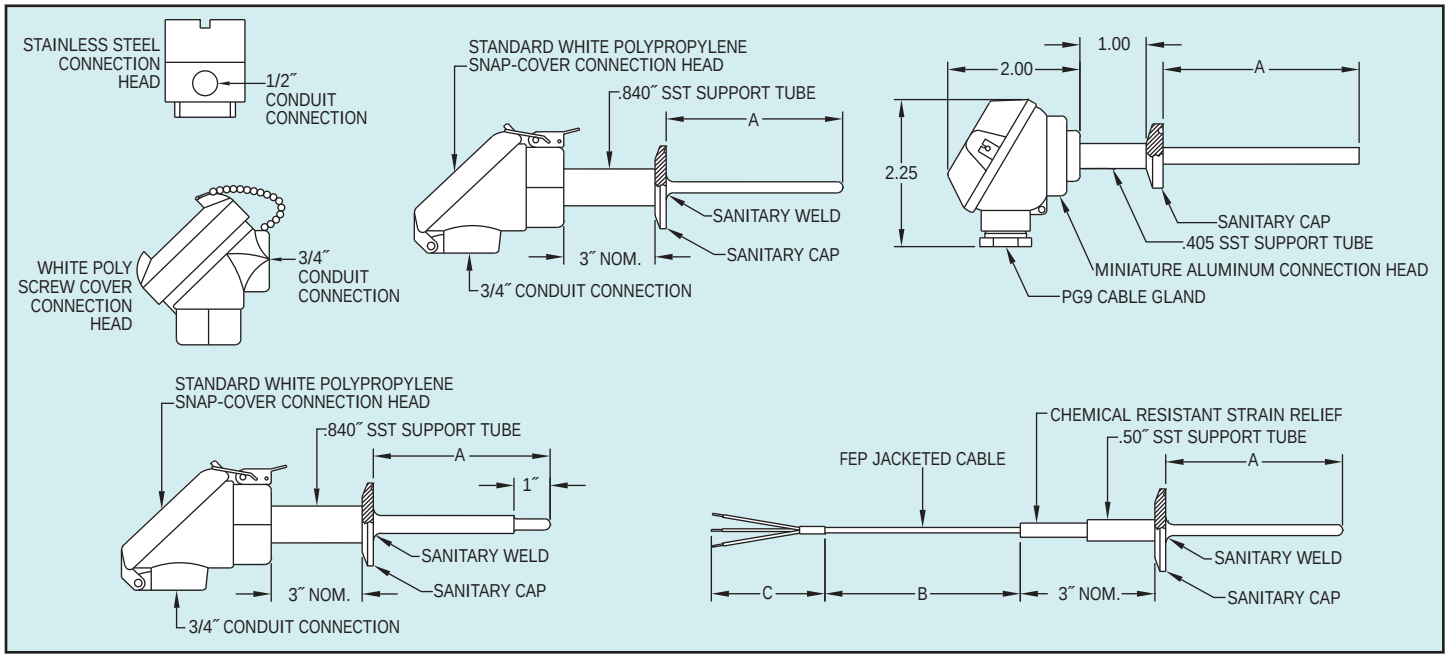

16 AMP CLAMP CAP

Size Tube O.D.	O.D.	Thickness
1/2 or 3/4	1.00	.188
1	1.98	.25
1-1/2	1.98	.25
2	2.51	.25
2-1/2	3.03	.25
3	3.57	.25

16A BEVEL SEAT

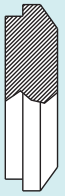

Size Tube O.D.	O.D.	Thickness
1	1.31	.46
1-1/2	1.84	.56
2	2.37	.62
2-1/2	2.90	.66
3	3.43	.71

16APV APC

Size Tube O.D.	O.D.	Thickness
1	1.38	.29
1-1/2	1.88	.42
2	2.38	.46
2-1/2	2.88	.47
3	3.38	.50

16 AI-14I I-LINE

Size Tube O.D.	O.D.	Thickness
1	2	.50
1-1/2	2	.50
2	2.65	.56
2-1/2	3.12	.56
3	3.87	.75

Model Coding:

D □ □ □ □ □ - □ □ □ - □ □ □ - □ □ □ - □ □

A in 1/10 inch — B in inches — C in inches

SENSOR TYPE
- J (T/C)
- K (T/C)
- E (T/C)
- T (T/C)
- 6 (RTD DIN)
- 4 (RTD NIST)

SHEATH
- 1 - Straight
- 3 - Stepped Tip

CAP STYLE
- 2 - 16A Without Nut
- 3 - 16A With Nut
- 4 - 16AI-14I
- 5 - 16 Amp
- 6 - 16 APV Without Nut
- 7 - 16 APV With Nut

CAP SIZE
- 1 - 1/2″
- 2 - 3/4″
- 3 - 1-1/2″
- 4 - 2 ″
- 5 - 2-1/2″
- 6 - 3″

TERMINATION
- 0 - No Termination
- 2 - White Screw Cover PP Head (3/4″ Conduit)
- 3 - Screw Cover 316SS Head (1/2″ Conduit)
- 4 - Split Leads
- 5 - Split Leads With Lugs
- 6 - Split Leads With BX & Lugs
- 7 - STD Plug
- 8 - STD Jack
- 9 - Miniature Aluminum Snap Cover Head

ELEMENTS
- 1 - Single
- 2 - Dual

JUNCTION TYPE
- 1 - Grounded
- 2 - Ungrounded

SENSOR O.D. NOMINAL/REDUCED
- 1 - 5/32″ / NA
- 2 - 1/4″ / 1/8″
- 3 - 3/8″ / 3/16″
- 6 - 1/4″ / NA
- 7 - 1/2″ / NA